CAPACITY	SYMBOL/SERIAL NO.	CIRCUIT DIAGRAM
AC100–240V, 50/60Hz		LED driver — LED module
250W		

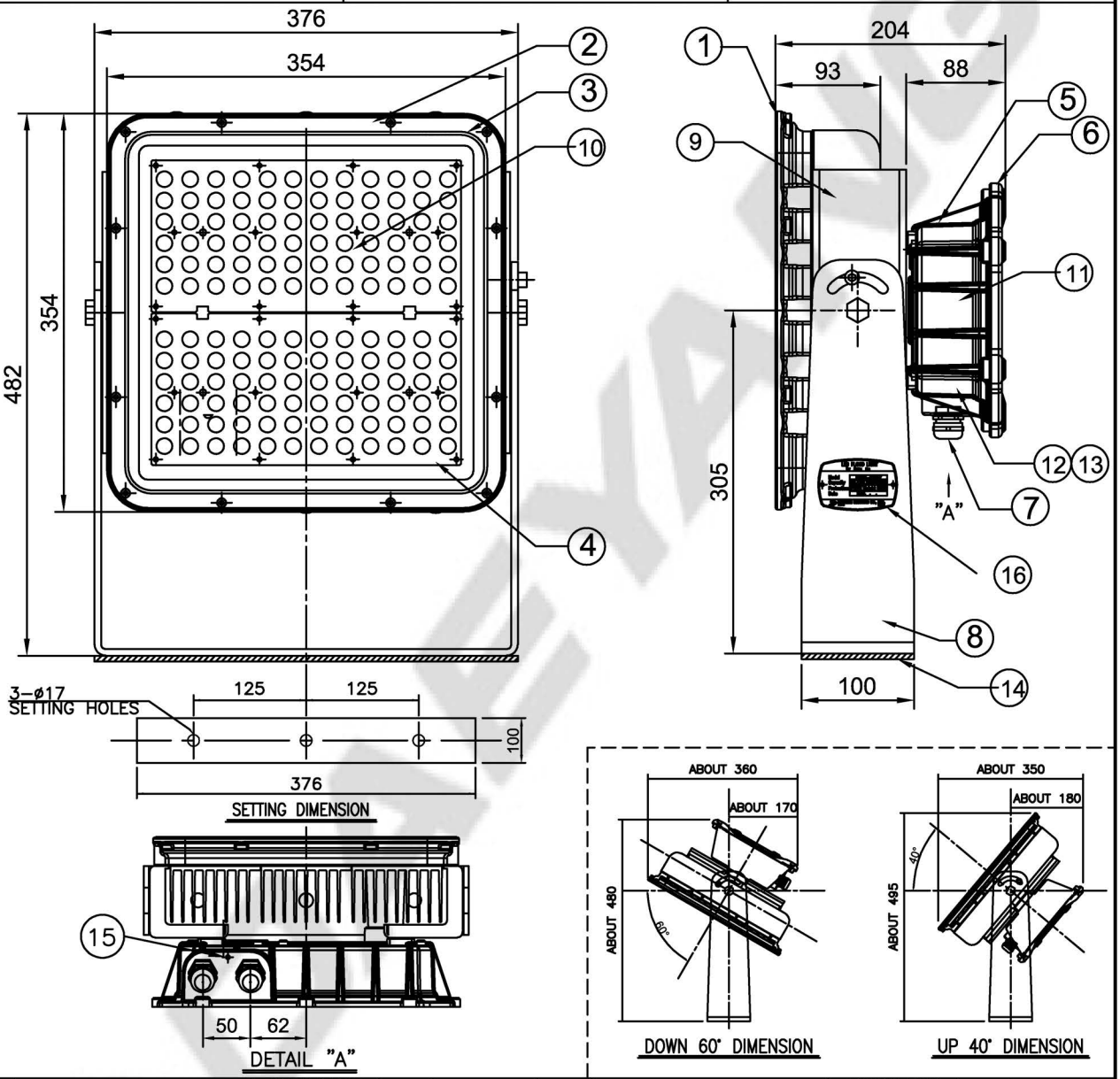

NO	NAME OF PARTS	MATERIAL	Q'TY	REMARKS	NO	NAME OF PARTS	MATERIAL	Q'TY	REMARKS
16	NAME PLATE	STAINLESS STEEL316L	1		8	ARM	STAINLESS STEEL316L	1	
15	OUTSIDE EARTH BOLT	STAINLESS STEEL316	1	M5	7	CABLE GLAND(R25M)	BRASS	2	ø9~ø17
14	ANTI–VIBRATION PACKING	C.R.	1	5.0mm	6	LED driver CASE COVER	ALUMINIUM	1	
13	INSIDE EARTH BOLT	STAINLESS STEEL304	1		5	LED driver CASE	ALUMINIUM	1	
12	TERMINAL BLOCK	–	2		4	FRONT GLASS	GLASS	1	
11	LED driver	–	1		3	GLOBE PACKING	SILICONE	1	
10	LED module	–	2	6,000K	2	GLOBE FRAME	STAINLESS STEEL316L	1	
9	BODY BRACKET	STAINLESS STEEL316L	2		1	BODY	ALUMINIUM	1	

APPROVED	B. K. KIM	UNIT	MM
CHECKED	J. W. PARK	SCALE	N/S
DESIGN	H. S. SHIN	COLOR	N–9.3
DATE	2016.02.01	IP	67

TITLE:

LED FLOOD LIGHT

FOR MARINE USE

DAEYANG

MODEL NO.	PF250L–550AWCFNC60(R25M)	WEIGHT	24 Kg
DWG NO.	LR5670001	SHEET NO.	28

[보안인증] 김병인 2019/05/10 09:44:21